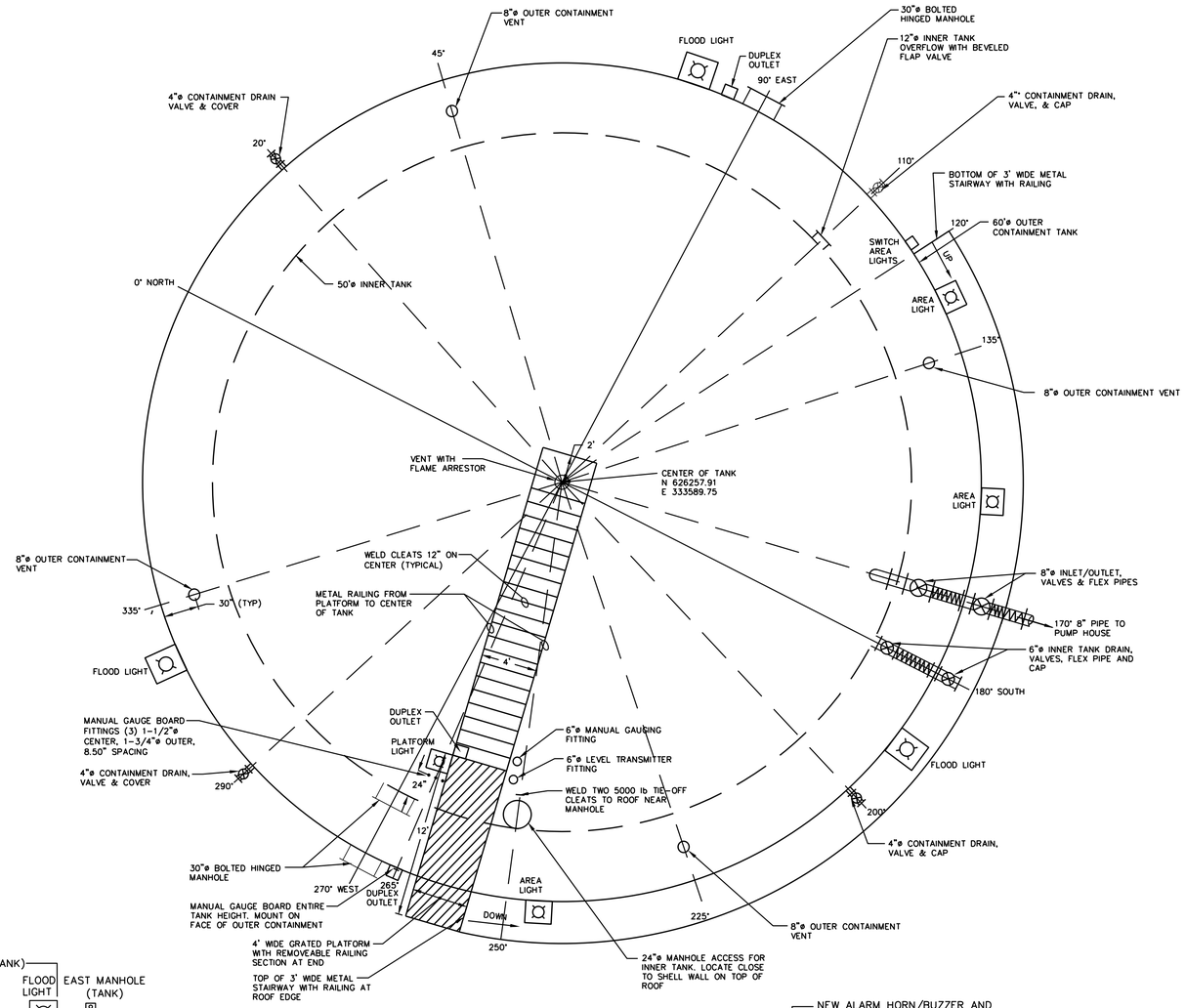

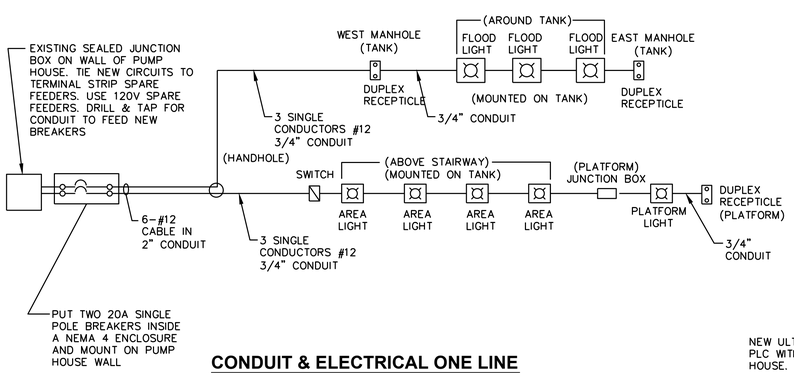

CONDUIT & ELECTRICAL ONE LINE LAYOUT PLAN

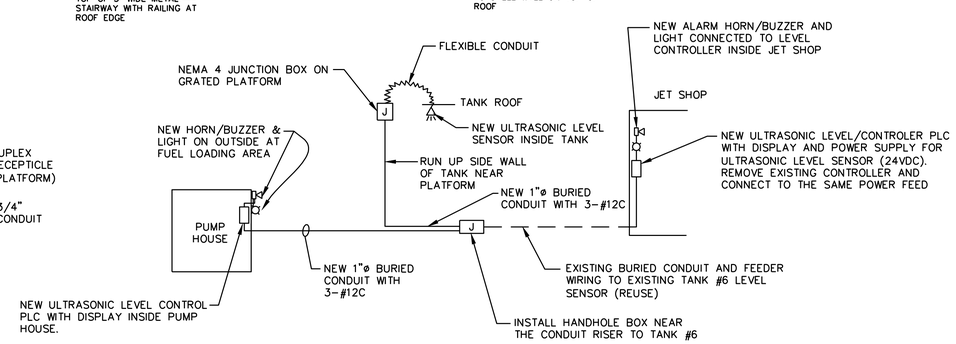

TANK LEVEL SENSING & ALARM LAYOUT

0 5' 10'
GRAPHIC SCALE

NO.	REVISIONS	DATE	APPROVAL
1	ADDENDUM #3 – STAIRWAY & PLATFORM MOVED WITH LIGHTS & SWITCH	8/24/10	CNS

CONNECTICUT RESOURCES RECOVERY AUTHORITY
RESERVE ROAD
HARTFORD, CONNECTICUT

TRC
21 Griffin Road North
Windsor, CT 06095
(860) 298-9692

DESIGN:	SWL	07/16/10
DRAWN:	REA	07/16/10
CHECKED:	CNS	07/16/10
SCALE: 1"=5'		
PROJECT: 153306-000390-000006		
DRAWING		

TANK No.6 REPLACEMENT PROJECT ELECTRICAL PLAN

E-1

J:\CAD\153306\000390\Design Documents\
PLATE-1.dwg Layout:E-1 August 23, 2010-3:58PM Roloma