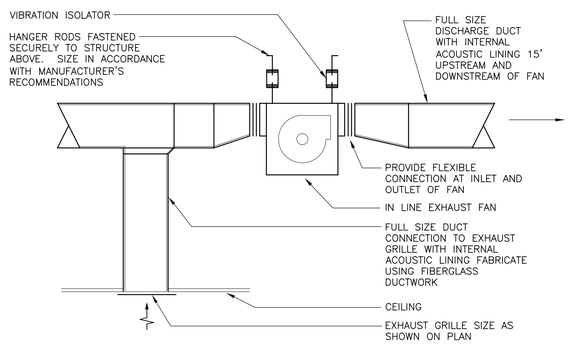


8 INLINE FAN
N.T.S.

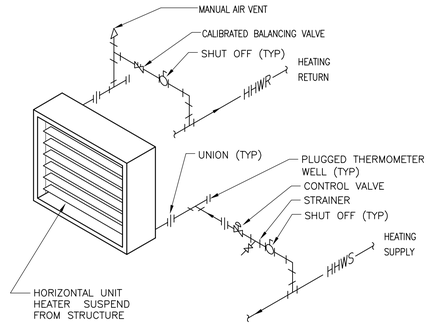


NOTES: 1. ALL VALVES AND FITTINGS SHALL BE THE SAME SIZE AS PIPE UNLESS NOTED OTHERWISE.

2. ALL PIPE TAKE OFFS SHALL BE SWING JOINTS.

7 HOT WATER UNIT HEATER PIPING DETAIL
N.T.S.

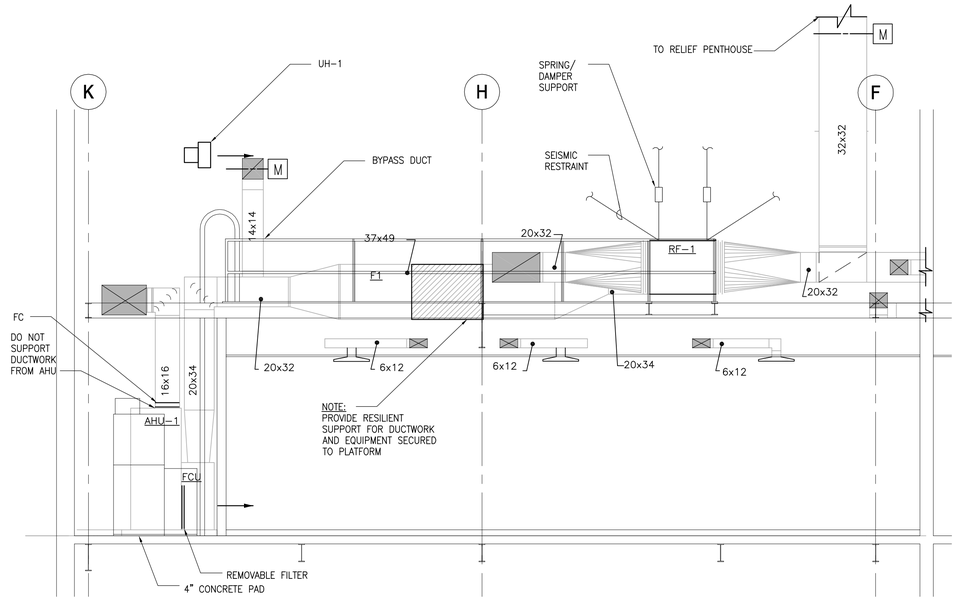


3 SECTION A-A
1/4" = 1'-0"

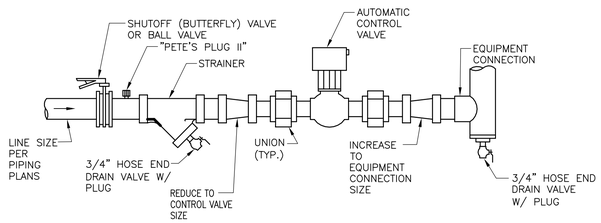


NOTE:

SUPPLY WATER ARRANGEMENT SHOWN. REVERSE VALVES AND FITTING FOR RETURN WATER ARRANGEMENT

6 TYPICAL CONTROL VALVE ARRANGEMENT
N.T.S.

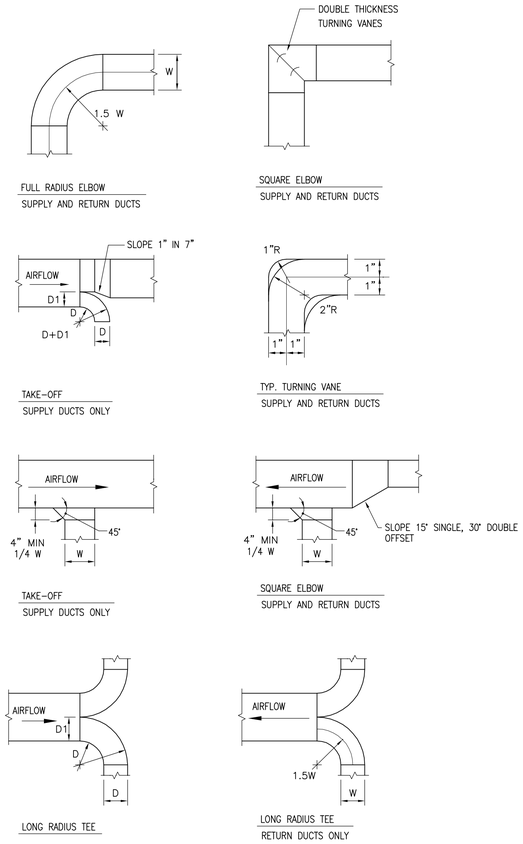


4 TYPICAL DUCT FITTING DETAILS
N.T.S.

NOTE: DUCT AND FITTING CONSTRUCTION SHALL COMPLY WITH ALL SMACNA STANDARDS

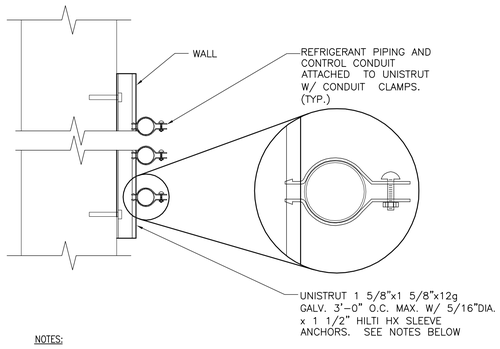


NOTES:

USE STAINLESS STEEL ANCHORS INTO CONCRETE.
USE CARBON STEEL ANCHORS INTO BRICK OR MASONRY.
USE TOGGLE BOLTS IN STUD WALLS.

ANCHOR TO BE INSTALLED IN 5/16"DIA. HOLES DRILLED WITH HILTI CARBIDE TIPPED DRILL BITS. ANCHORS SHALL BE INSTALLED PER MANUFACTURER'S RECOMMENDATIONS.

2 WALL MOUNTED TRAPEZE ASSEMBLY
N.T.S.

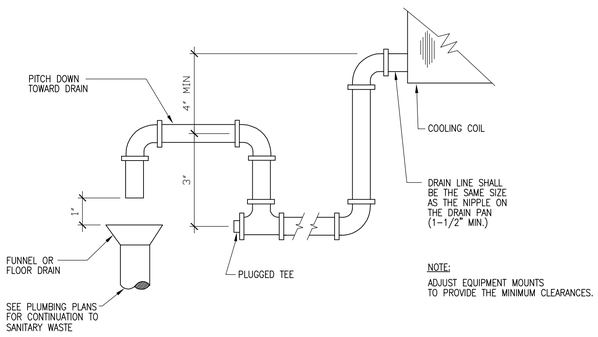


NOTE:

ADJUST EQUIPMENT MOUNTS TO PROVIDE THE MINIMUM CLEARANCES.

5 TRAP ASSEMBLY DETAIL
N.T.S.

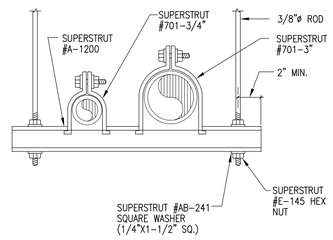


1 TRAPEZE HANGER DETAIL
N.T.S.


CONNECTICUT RESOURCES RECOVERY AUTHORITY
TEL. NO. (860)-757-7700
FAX. NO. (860)-757-7743


A&E FIRM


URS
URS CORPORATION AES
500 ENTERPRISE DRIVE
ROCKY HILL, CT. 06067
1-(860)-529-8882


A&E SEAL


THE INFORMATION CONTAINED IN THIS SET OF DOCUMENTS IS PROPRIETARY BY NATURE. ANY USE, DISCLOSURE OTHER THAN THAT WHICH RELATES TO CRRA AND MDC IS STRICTLY PROHIBITED.


REVISIONS

| NUMBER | DATE | REMARKS |
|---|---|---|
| | | |

CONTROL ROOM HVAC SYSTEMS IMPROVEMENT

300 MAXIM ROAD
HARTFORD, CT.

| | |
|---|---|
| PROJECT NO: | 36937520.00001 |
| DRAWN BY: | PA/DEP |
| CHECKED BY: | VMD |
| DATE: | 04/28/08 |
| CADD FILE: | AS NOTED |

MECHANICAL DETAILS

M-502


P:\Disciplines\Mechanical\Sheet\M-502.dwg April 30, 2008 - 11:25 AM