DRAWING NOTES:

1. REFER TO DRAWING MED-101 FOR ALL ELECTRICAL WIRING ASSOCIATED WITH ALL EXISTING MECHANICAL EQUIPMENT BEING REMOVED.
2. REFER TO ELECTRICAL RISER DIAGRAM ON SHEET E-102 FOR ADDITIONAL INFORMATION

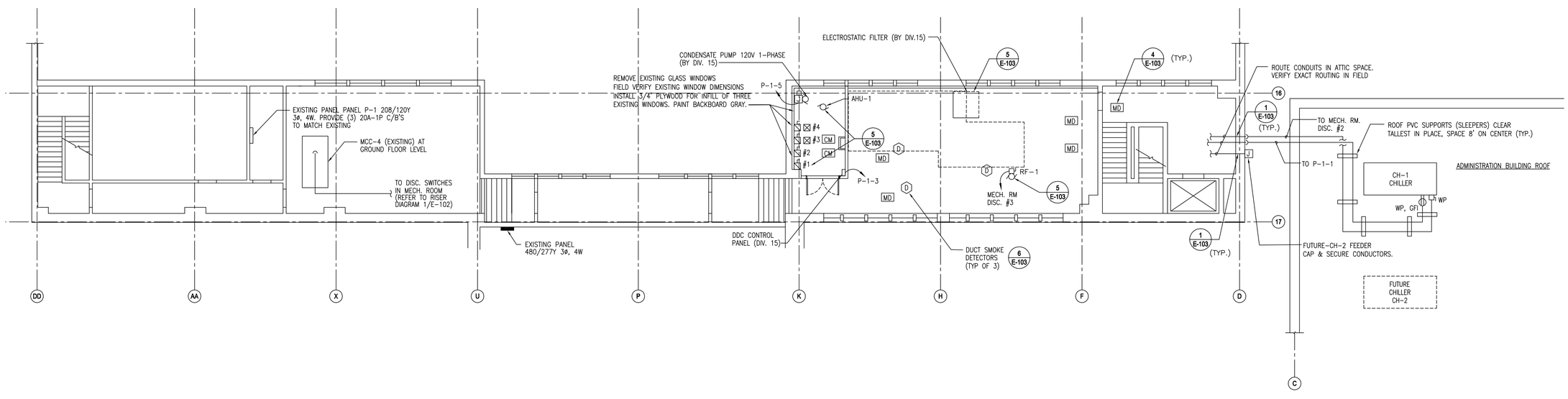

1 / E-103 CONTROL ROOM / VISITOR AREA - PROPOSED MEZZANINE / ATTIC & ROOF ELECTRICAL PALN

SCALE: 1/8" = 1'-0"

PROJECT NORTH

CONNECTICUT RESOURCES RECOVERY AUTHORITY

TEL. NO. (860)-757-7700
FAX. NO. (860)-757-7743

A&E FIRM

URS
URS CORPORATION AES
500 ENTERPRISE DRIVE
ROCKY HILL, CT. 06067
1-(860)-529-8882

A&E SEAL

THE INFORMATION CONTAINED IN THIS SET OF DOCUMENTS IS PROPRIETARY BY NATURE. ANY USE, DISCLOSURE OTHER THAN THAT WHICH RELATES TO CRRA AND MDC IS STRICTLY PROHIBITED.

REVISIONS

NUMBER	DATE	REMARKS

CONTROL ROOM HVAC SYSTEMS IMPROVEMENT

300 MAXIM ROAD
HARTFORD, CT.

PROJECT NO:	36937520.00001
DRAWN BY:	JCD
CHECKED BY:	LMM
DATE:	04/28/08
CADD FILE:	AS NOTED

CONTROL ROOM/ VISITOR AREA ELECTRICAL PLAN

E-101

P:\Disciplines\Electrical\Sheet\E-101.dwg April 30, 2008 - 12:03 PM