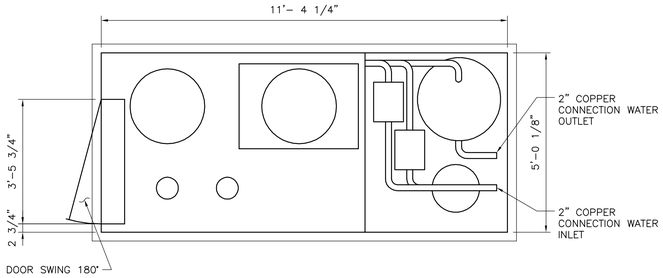

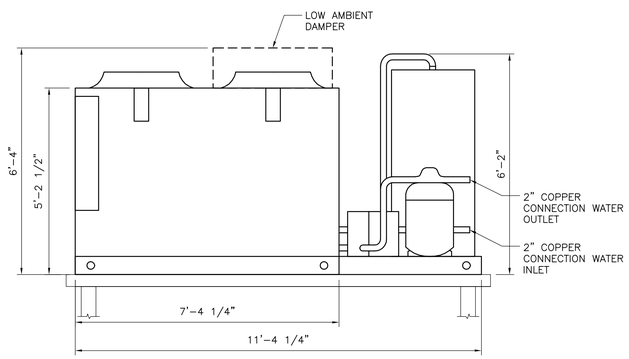

9 CHILLER & PUMP PACKAGE DETAIL
N.T.S.

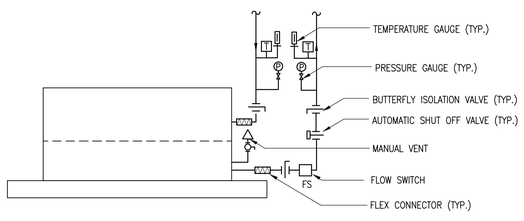

8 AIR COOLED CHILLER CONNECTION DETAIL
N.T.S.

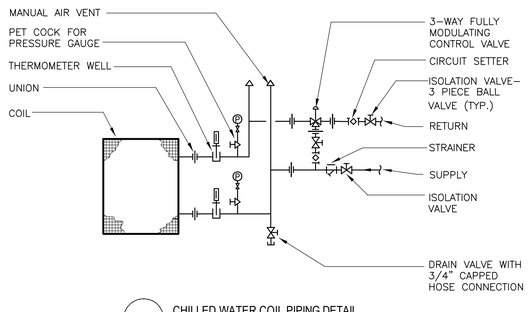

7 CHILLED WATER COIL PIPING DETAIL
N.T.S.

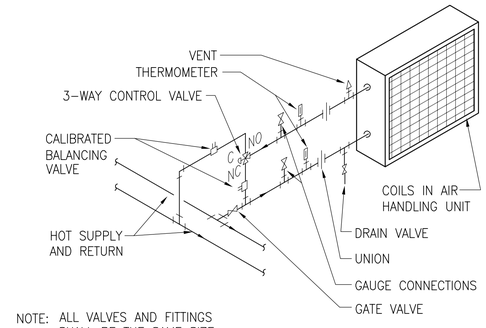

NOTE: ALL VALVES AND FITTINGS SHALL BE THE SAME SIZE AS PIPE UNLESS NOTED OTHERWISE

6 HEATING COIL PIPING DETAIL
N.T.S.

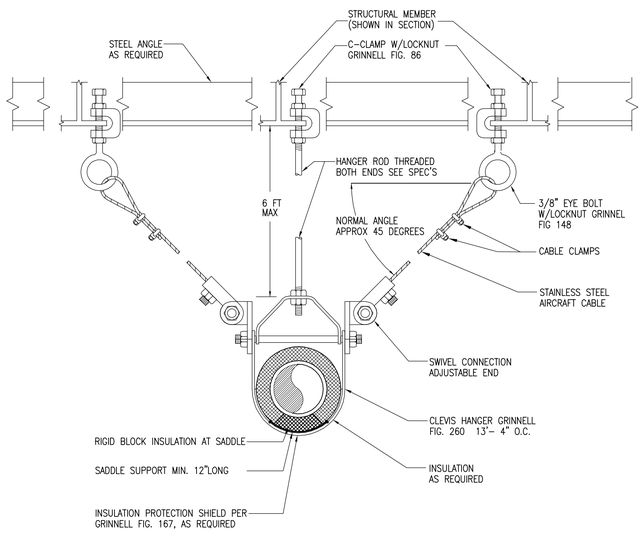

NOTE:
1. USE ROLLERS WHERE PIPE MOVEMENT IS ANTICIPATED
2. MAXIMUM SPACING OF CLEVIS HANGER = 13'-4"

5 PIPE HANGING DETAIL- SEISMICALLY RESTRAINED
N.T.S.

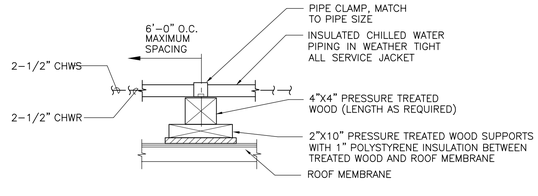

4 CHILLED WATER PIPING ROOF SUPPORT
N.T.S.

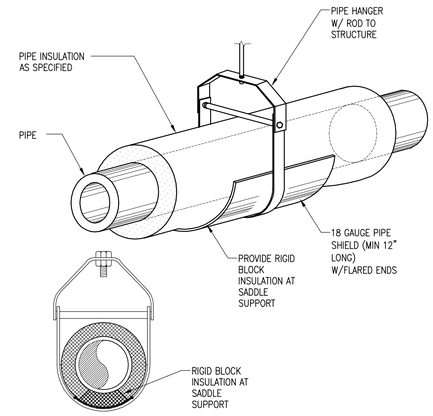

3 DETAIL FOR TYPICAL PIPE HANGER
N.T.S.

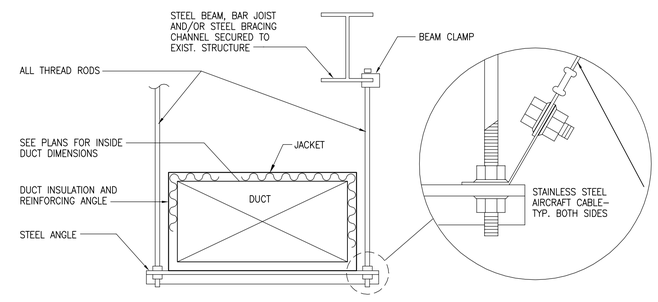

NOTES:
1. DO NOT SUPPORT DUCTS FROM METAL DECK.
2. SIZE AND PROVIDE SUPPORT STEEL MEMBERS AS REQ'D.

2 TYPICAL DUCT HANGING DETAIL
N.T.S.

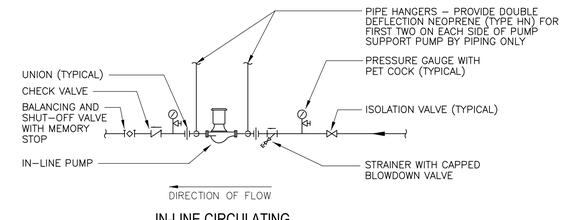

1 IN-LINE CIRCULATING PUMP DETAIL
N.T.S.

CONNECTICUT RESOURCES RECOVERY AUTHORITY
TEL. NO. (860)-757-7700
FAX. NO. (860)-757-7743

A&E FIRM

URS
URS CORPORATION AES
500 ENTERPRISE DRIVE
ROCKY HILL, CT. 06067
1-(860)-529-8882

A&E SEAL

THE INFORMATION CONTAINED IN THIS SET OF DOCUMENTS IS PROPRIETARY BY NATURE. ANY USE, DISCLOSURE OTHER THAN THAT WHICH RELATES TO CRRA AND MDC IS STRICTLY PROHIBITED.

REVISIONS

NUMBER	DATE	REMARKS

CONTROL ROOM HVAC SYSTEMS IMPROVEMENT

300 MAXIM ROAD
HARTFORD, CT.

PROJECT NO: 36937520.00001	
DRAWN BY:	DEP
CHECKED BY:	VMD
DATE:	04/28/08
CADD FILE:	AS NOTED

MECHANICAL DETAILS

M-501

P:\Disciplines\Mechanical\Sheet\M-501.dwg April 30, 2008 - 11:24 AM