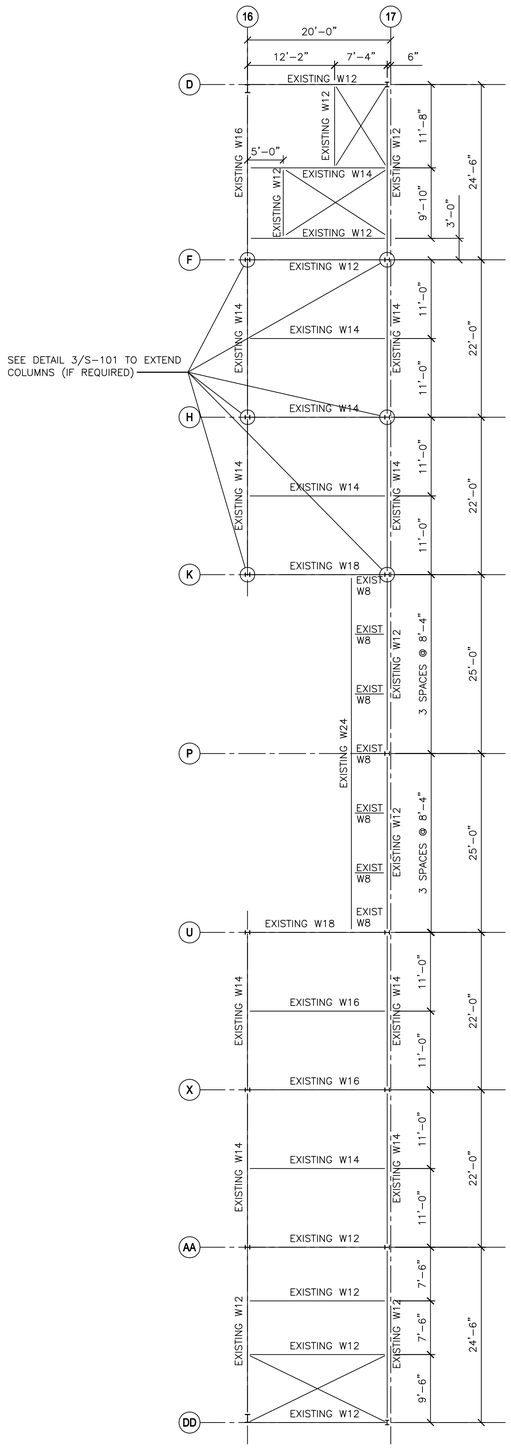

1 S-101 MEZZANINE FRAMING PLAN
SCALE: 1" = 10'-0" TOS EL. 44.54'

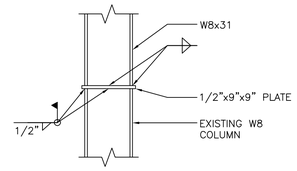

3 S-101 COLUMN EXTENSION DETAIL
SCALE: 1"= 1'-0"

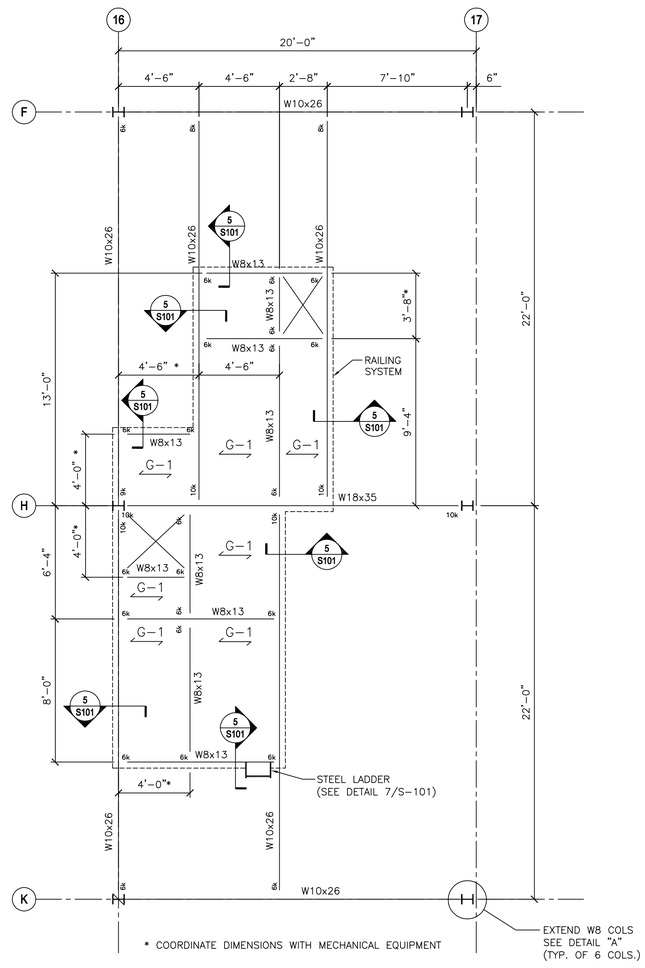

NOTES:

1. G-1 – INDICATES SPAN DIRECTION OF 1 1/2" GALVANIZED STEEL GRATING
2. ALL STEEL TO BE ASTM A Fy = 50,000 PSI
3. ALL FIELD DIMENSIONS TO BE VERIFIED IN FIELD BY GENERAL CONTRACTOR PRIOR TO ANY FABRICATION
4. EXISTING COLUMN SIZE ASSUMED TO BE W8x31. GENERAL CONTRACTOR TO VERIFY
5. CONTRACTOR TO VERIFY STRUCTURAL STEEL A MIN. 3'-0" ABOVE EXISTING CEILING GRID

2 S-101 MECHANICAL SUPPORT FRAMING
SCALE: 1/4" = 1'-0" TOS EL. 66.54'

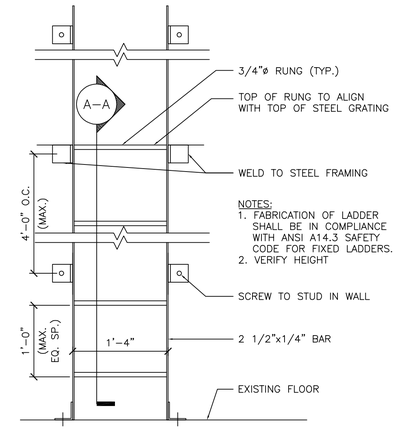

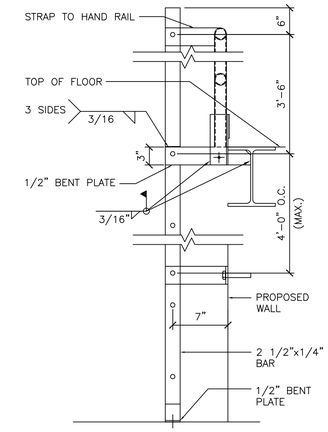

SECTION A–A

7 S-101 STEEL LADDER DETAIL
SCALE: 1"= 1'-0"

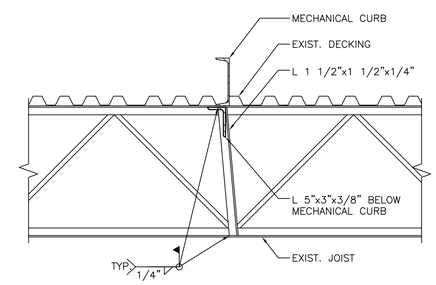

6 S-102 6 S-101 JOIST REINFORCING DETAIL
SCALE: 1"= 1'-0"

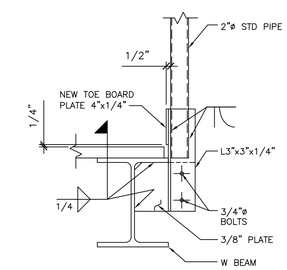

5 S-101 GUARD RAIL CONNECTION
SCALE: 1 1/2" = 1'-0"

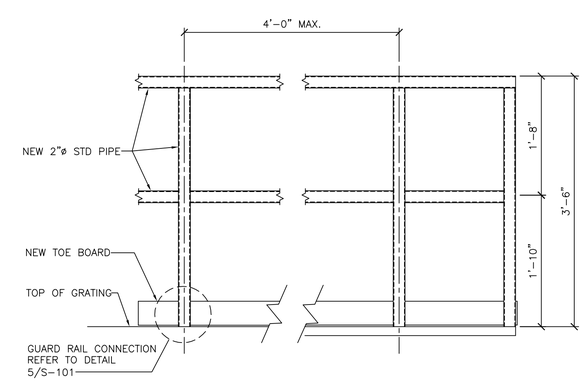

4 S-101 GUARD RAIL ELEVATION
SCALE: 1" = 1'-0"

PROJECT NORTH

PROJECT NORTH

CONNECTICUT RESOURCES RECOVERY AUTHORITY
TEL. NO. (860)-757-7700
FAX. NO. (860)-757-7743

A&E FIRM
URS
URS CORPORATION AES
500 ENTERPRISE DRIVE
ROCKY HILL, CT. 06067
1-(860)-529-8882

A&E SEAL

THE INFORMATION CONTAINED IN THIS SET OF DOCUMENTS IS PROPRIETARY BY NATURE. ANY USE, DISCLOSURE OTHER THAN THAT WHICH RELATES TO CRRA AND MDC IS STRICTLY PROHIBITED.

REVISIONS

NUMBER	DATE	REMARKS

CONTROL ROOM HVAC SYSTEMS IMPROVEMENT

300 MAXIM ROAD
HARTFORD, CT.

PROJECT NO:	36937520.00001
DRAWN BY:	PD
CHECKED BY:	PJG
DATE:	04/28/08
CADD FILE:	AS NOTED

MEZZANINE FRAMING PLANS AND DETAILS

S-101

P:\Disciplines\Structural\Sheet\S-101.dwg April 29, 2008 – 12:07 PM