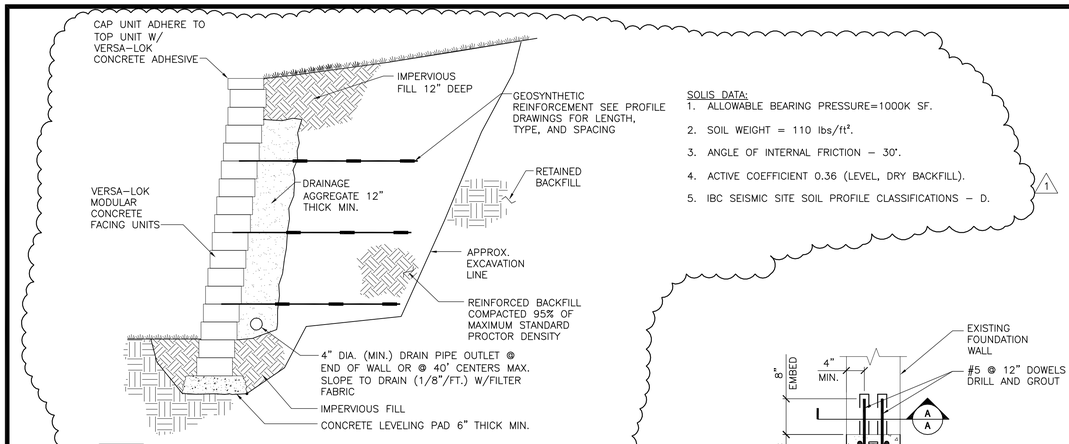


SOLIS DATA:
1. ALLOWABLE BEARING PRESSURE=1000K SF.
2. SOIL WEIGHT = 110 lbs/ft³.
3. ANGLE OF INTERNAL FRICTION – 30'.
4. ACTIVE COEFFICIENT 0.36 (LEVEL, DRY BACKFILL).
5. IBC SEISMIC SITE SOIL PROFILE CLASSIFICATIONS – D.

1

11 / S-202 TYPICAL SECTION-REINFORCED RETAINING WALL
SCALE: N.T.S.

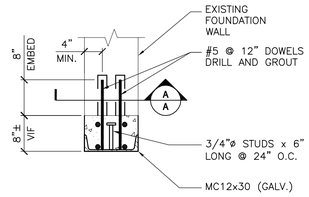


PLAN

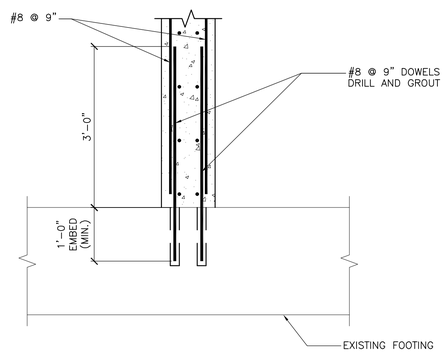


SECTION A-A

7 / S-101 — 7 / S-202 DETAIL
SCALE: 3/4" = 1'-0"

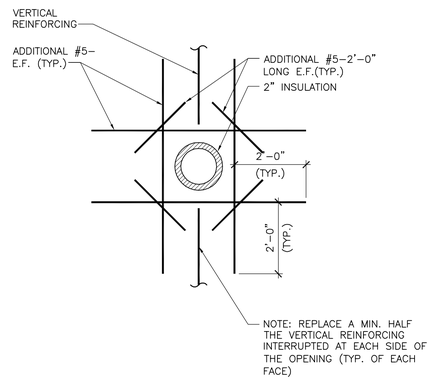


5 / S-202 TYPICAL PIPE PENETRATION THRU CIP CONC. WALL DETAIL
SCALE: N.T.S.

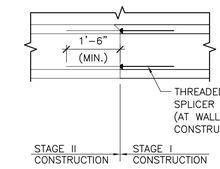


10 / S-101 — 10 / S-202 WALL OR FOOTING CONSTRUCTION DETAIL
SCALE: 1/2" = 1'-0"

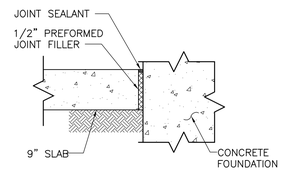


3 / S-201 — 3 / S-202 JOINT DETAIL
SCALE: 3/4" = 1'-0"

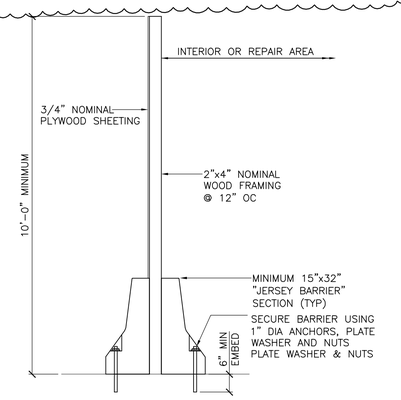


NOTES:
1. THE TEMPORARY CONC JERSEY BARRIER SHOWN SHALL BE CHEMICALLY ANCHORED TO THE EXISTING SLAB. THIS WILL CONSIST OF DRILLING HOLES INTO EXISTING CONCRETE, PLACING ANCHORS INTO HOLE, AND SECURING WITH PRE-APPROVED CHEMICAL ANCHOR MATERIAL.
2. A MINIMUM OF 4 ANCHOR BOLTS FOR EVERY 20 LINEAR FEET OF EACH TEMPORARY CONCRETE JERSEY BARRIER.
3. UPON REMOVAL OF TEMPORARY CONCRETE JERSEY BARRIER, THE ANCHOR BOLTS WILL BE CUT BELOW THE SURFACE OF THE EXISTING CONCRETE SLAB AND FILL THE TOP OF THE HOLE WITH NON-SHRINK GROUT.

9 / S-202 TEMORARY CONSTRUCTION BARRIER DETAIL
SCALE: 1/2" = 1'-0"

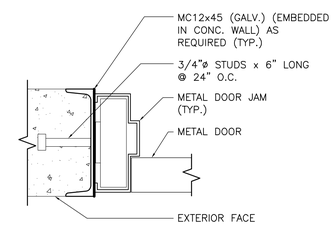


2 / S-202 DOOR FRAME DETAIL
SCALE: 3" = 1'-0"

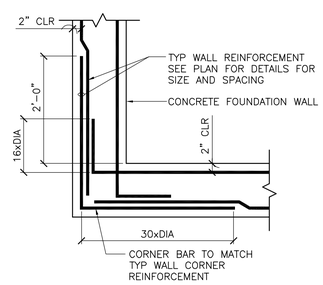


CORNER

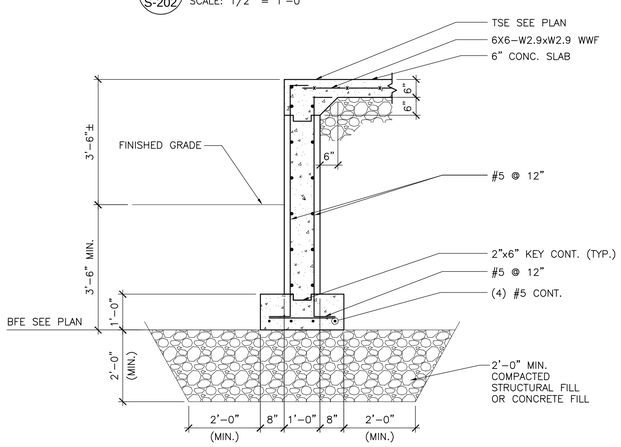


8 / S-102 — 8 / S-202 SCALE HOUSE FOUNDATION DETAIL
SCALE: 1/2"= 1'-0"

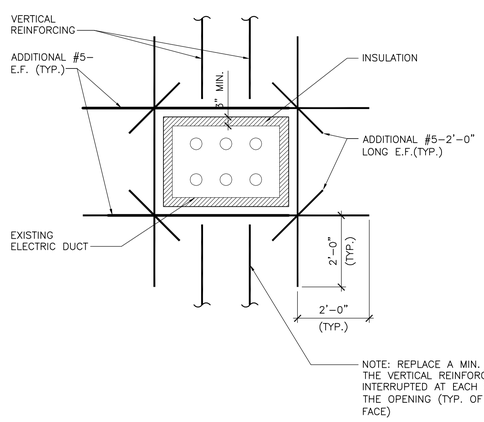


6 / S-202 TYPICAL DUCT BANK PENETRATION THRU CIP CONC. WALL DETAIL
SCALE: N.T.S.

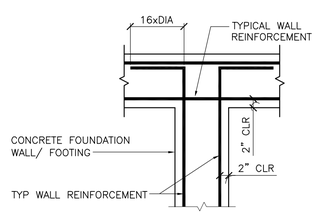


INTERSECTION

4 / S-202 TYPICAL CORNER REINFORCEMENT DETAILS
SCALE: 3/4" = 1'-0"

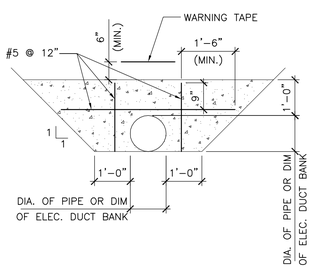


1 / S-101 — 1 / S-202 TYPICAL CONCRETE ENCASEMENT DETAIL
SCALE: 1/2" = 1'-0"


CONNECTICUT RESOURCES RECOVERY AUTHORITY
TEL. NO. (860)-757-7700
FAX. NO. (860)-757-7743


A&E FIRM
URS
URS CORPORATION AES
500 ENTERPRISE DRIVE
ROCKY HILL, CT. 06067
1-(860)-529-8882

A&E SEAL


THE INFORMATION CONTAINED IN THIS SET OF DOCUMENTS IS PROPRIETARY BY NATURE. ANY USE, DISCLOSURE OTHER THAN THAT WHICH RELATES TO CONNECTICUT RESOURCES RECOVERY AUTHORITY IS STRICTLY PROHIBITED.


REVISIONS

| NUMBER | DATE | REMARKS |
|---|---|---|
| 1 | 05/23/08 | ADDED SECTIONS |

MID-CONNECTICUT PROJECT
POWER BLOCK FACILITY
ASH LOADOUT BUILDING
& SITE MODIFICATIONS

RESERVE ROAD
HARTFORD, CT.

| | |
|---|---|
| PROJECT NO: 36937668 | |
| DRAWN BY: | PD |
| CHECKED BY: | PJG |
| DATE: 05/14/08 | |
| CADD FILE: | AS NOTED |

MISCELLANEOUS DETAILS AND SECTIONS

S-202


P:\Disciplines\Structural\Sheet\S-202.dwg May 21, 2008 – 4:02 PM