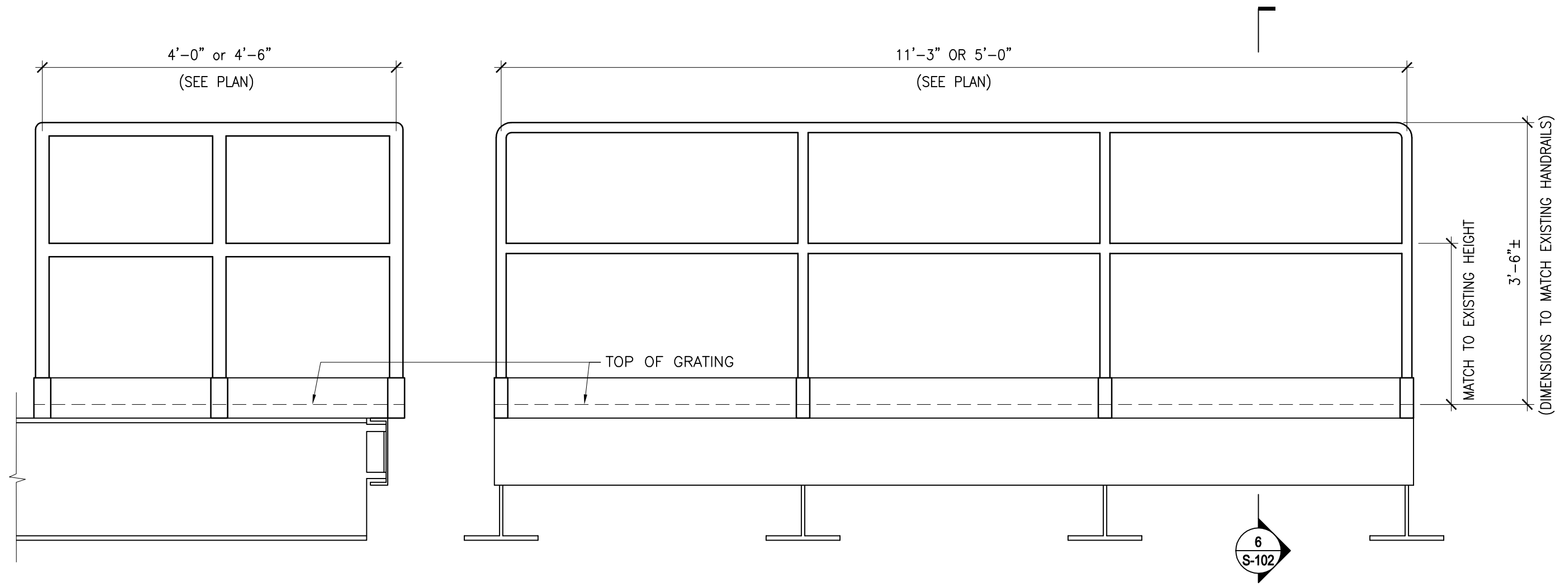

7 REMOVEABLE HANDRAIL DETAIL
S-101 SCALE: 3/4"= 1'-0"

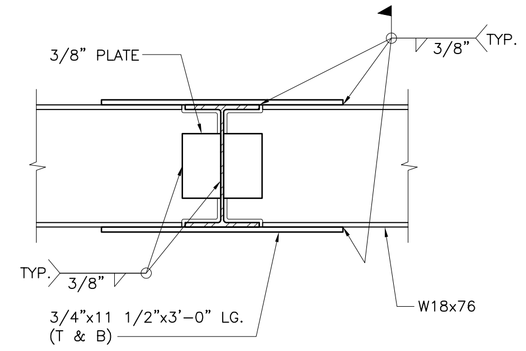

5 DETAIL
S-101 SCALE: 3/4"= 1'-0"

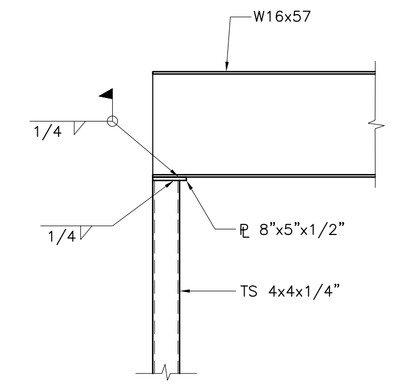

3 DETAIL
S-101 SCALE: 3/4"= 1'-0"

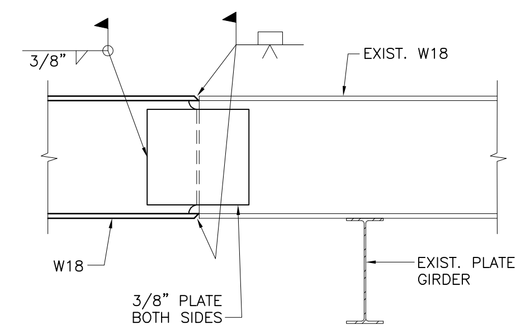

4 DETAIL
S-101 SCALE: 3/4"= 1'-0"

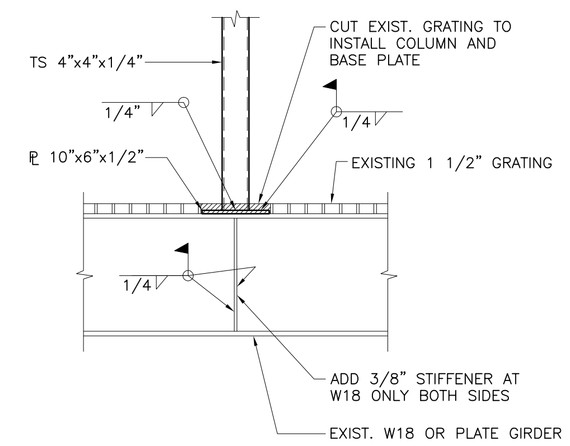

2 DETAIL
S-101 SCALE: 3/4"= 1'-0"

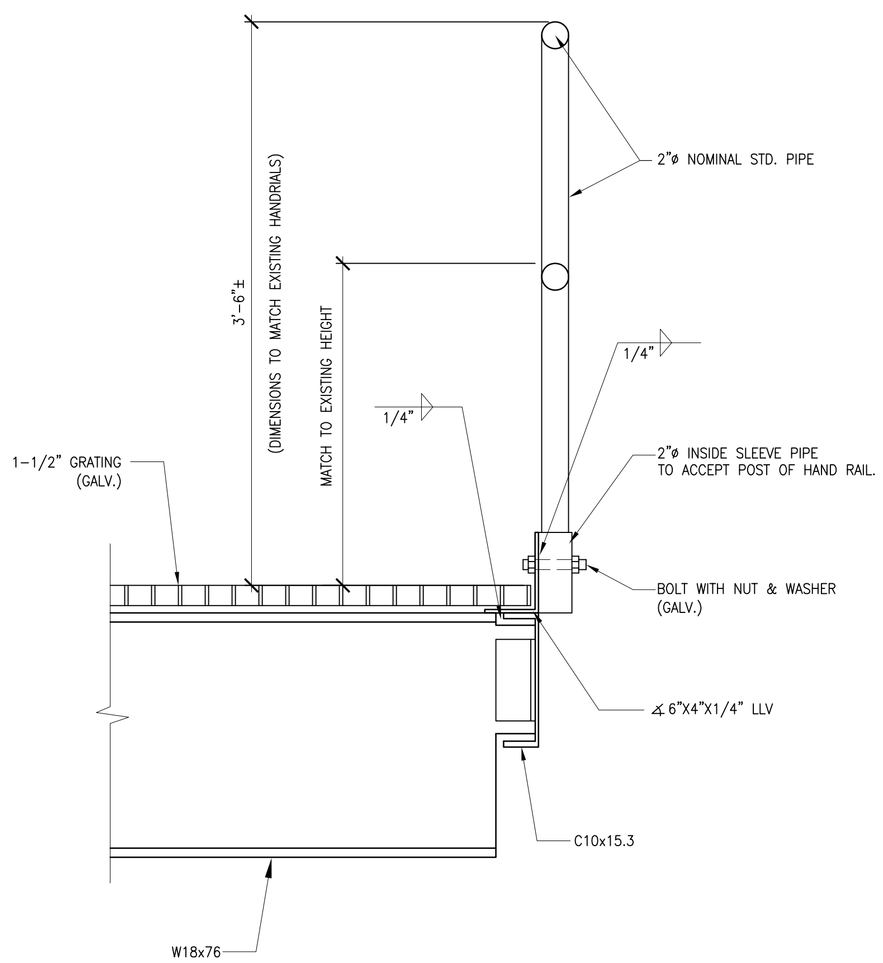

6 REMOVEABLE HANDRAIL DETAIL
S-102 SCALE: 1 1/2"= 1'-0"

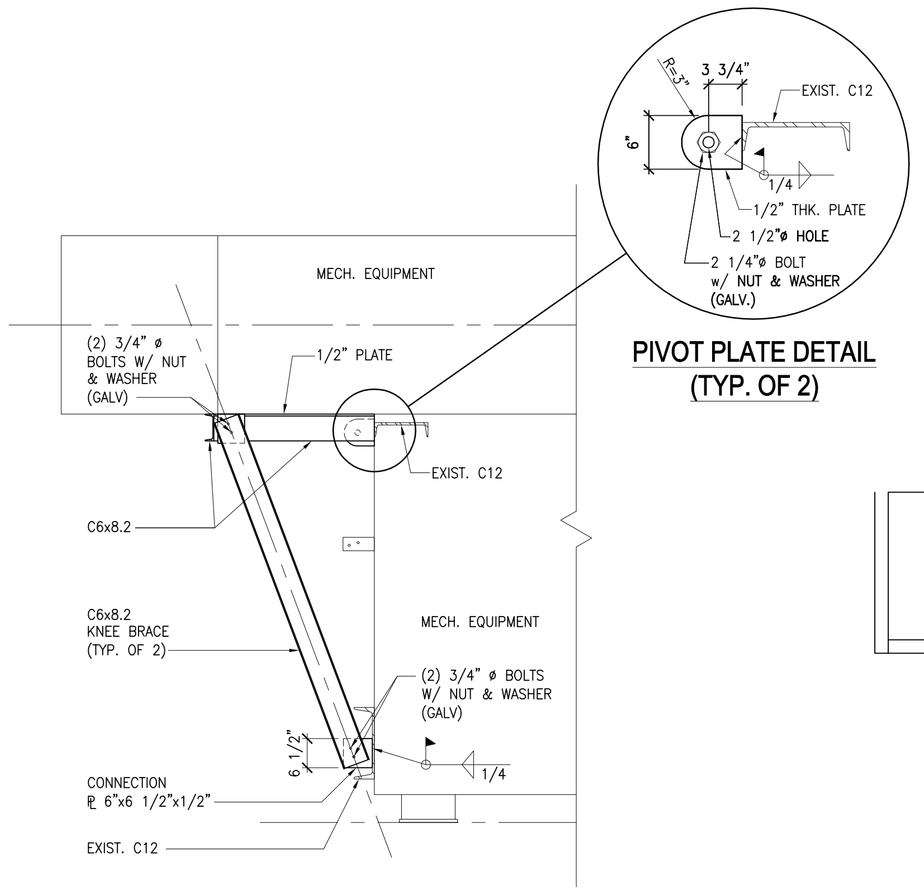

PIVOT PLATE DETAIL
(TYP. OF 2)

SIDE ELEVATION

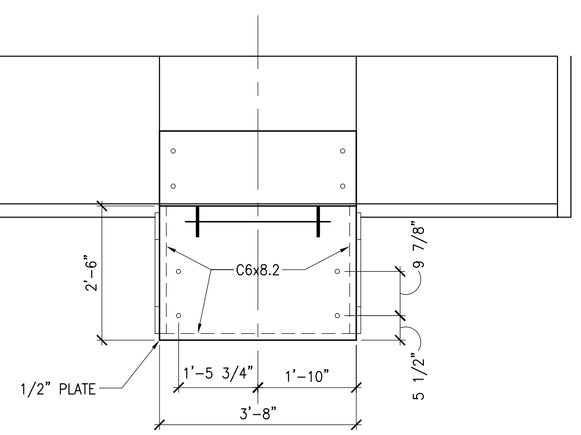

PLAN VIEW

NOTE: ALL BOLT TO BE ASTM A325.

1 FOLDABLE MECH. PLATFORM DETAIL
S-101 SCALE: 1/2"= 1'-0"

CONNECTICUT RESOURCES RECOVERY AUTHORITY
TEL. NO. (860)-757-7700
FAX. NO. (860)-757-7743

URS
URS CORPORATION AES
500 ENTERPRISE DRIVE
ROCKY HILL, CT 06067
1-(860)-529-8882

PROFESSIONAL SEAL

REVISIONS

PROJECT NO:36936963.00001

DRAWN BY: M.M.M.

DESIGNED BY: P.J.G.

CHECKED BY: R.A.S.

THE INFORMATION CONTAINED IN THIS SET OF DOCUMENTS IS PROPRIETARY BY NATURE. ANY USE OR DISCLOSURE OTHER THAN THAT WHICH RELATES TO THIS PROJECT IS STRICTLY PROHIBITED.

CRRA
PBF WAREHOUSE
HOIST CRANE FRAME

RESERVE ROAD
HARTFORD, CT

SCALE: AS NOTED

DATE: 02/13/07

DRAWING 4 OF 6

SECTIONS
AND
DETAILS

S102